G 7883 - PG 8536 washer-disinfectors

Miele PROFESSIONAL

Perfect reprocessing of laboratory glassware

Lab washers

A systematic approach to the reprocessing of laboratory glassware for analytical experiments

The wide-ranging benefits of the Miele System

Versatile and economical
- A range of lab washers scalable to all applications
- Modular approach with standard features and optional extras
- Efficient washing, disinfection and drying system

Simple and intelligent
- Tried-and-tested standard programmes, innovative special programmes and customised programme packages
- Electronic controls offering excellent user convenience

Better to be on the safe side
- Process documentation interface
- All machines are fully compliant with EN ISO 15883
- Assignment of mobile units and cleaning programmes for laboratory glassware through automatic carriage detection

Competent and innovative
- Intensive development and close cooperation

DURAN GROUP empfiehlt recommends Miele PROFESSIONAL

- Trend-setting process development and product specifications

Single-source supply
- In-house advisory services and blanket service coverage
- Qualification (Installation Qualification and Operation Qualification) of laboratory glassware cleaning systems
- Service contracts for peace of mind
- Attractive financing offers

Technical features vary according to the model

A systematic approach – typically Miele
With washer-disinfectors, special reprocessing methods and accessories tailored to the specific needs of applications, Miele offers a comprehensive and systematic approach to the safe and thorough reprocessing of a wide range of laboratory glassware.

Moving beyond standard solutions, Miele specialists work closely with laboratory staff to arrive at customised solutions to meet varied and specific needs.

Miele's system solution incorporates the following aspects
- Washer-disinfectors and drying systems
- A broad selection of baskets and inserts
- Water pre-treatment
- Detergent recommendations
- Creation and analysis of cleaning programmes
- Machine commissioning by Miele Service
- Qualification package: Installation Qualification (IQ) and Operation Qualification (OQ)
- Peace-of-mind package including maintenance and full-service contracts

Contents

Lab washers G 7883, G 7893, G 7883 CD	Page 6
Lab washers PG 8535, PG 8536	Page 13
Segosoft process documentation	Page 20
Qualification of cleaning systems	Page 27
Upper and lower baskets	Page 28
Inserts and mobile units for laboratory glassware	Page 30
Transport trolleys, plinths	Page 38
Dispenser modules for liquid detergent	Page 39
Full demineralisation of water	Page 40
Soft water	Page 43
Technical data G 7883, G 7893, G 7883 CD	Page 44
Technical data PG 8535, PG 8536	Page 46

Practice · Experience · Expertise
Typically Miele

Illustration shows:
PG 8535 lab washer
with E 414 injector unit

Manual v. machine Reprocessing
Many laboratories have already seen the benefits of the machine-based reprocessing of glassware. Particularly when workloads are heavy, automatic reprocessing cuts down on work, reduces staffing needs and slashes costs.

One reason is to avoid the risk of breakage and the potential hazards to laboratory staff that come with handling glassware. Broken glass from manual cleaning, for instance, can cause serious injuries. Infectious and toxic contaminants pose a serious health risk. Many detergents used in cleaning are highly caustic.

Automatic, machine-based processes are also more easily standardised, validated and documented. And reprocessing in an automatic machine-based system offer maximum **protections to personnel**.

Challenge
The cleaning process must ensure that equipment, when used again, is not affected by its previous use. Requirements vary widely from one laboratory to the next. The following aspects must be clearly defined:

1. Application
Applications subdivide into general areas (organic, inorganic or physical chemistry, biology, microbiology, hospital, pharmaceutical, food industry or cosmetic industry laboratories, etc.) or according to procedures (preparatory work, analysis, sampling). The type of application will also be an important factor in determining the type of machine and accessories as well as the cleaning process and cleaning agents required.

2. Laboratory equipment
Laboratory equipment needs to be classified according to the type, size and quantity of items requiring reprocessing. This information enables Miele to provide a detailed quotation for the right system to meet individual requirements.

3. Contamination
Knowledge of physical and chemical attributes of the types of contamination the machine will need to deal with are of particular importance in choosing the cleaning process and type of cleaning agent to use.

4. Disinfection
For certain applications laboratory equipment has to be disinfected to contain the spread of bacteria.

5. Analytical methods
Methods of analysis used can be affected by particular contaminants on laboratory glassware. A knowledge of these factors is helpful in selecting the right detergents.

6. Purity for analytical experiments
Each laboratory has its own definition of what is 'analytically clean' depending on the specification, nature and repeatability of the analysis methods used. Built-in conductivity monitoring represents the ideal way to analyse glassware purity levels,

Miele and Duran.
Two strong brands in the laboratory.

Illustration shows:
G 7883 lab washer

DURAN GROUP empfiehlt recommends Miele PROFESSIONAL Miele PROFESSIONAL empfiehlt recommends DURAN GROUP

DURAN Group recommends Miele Professional
To guarantee the thorough, gentle and safe reprocessing of laboratory glassware, the DURAN Group recommends Miele lab washers: Miele quality 'Made in Germany' excels in terms of reliability and efficiency in everyday laboratory operations. Short cycle times and dependable results ensure that high-quality laboratory glassware is ready for use again in next to no time. Gentle reprocessing also prolongs the useful life of DURAN® laboratory glassware.

Miele washer-disinfectors represent a professional solution for laboratory glassware for analytical experiments:
- Research
- Production
- Analytical and preparatory areas, including microbiology and genetic engineering

Miele's holistic approach caters for individual variations:
- From professional standard solutions for general laboratory glassware reprocessing to high-tech solutions for exacting high-performance tasks.
- Special cleaning programmes to match contamination types ensure thorough reprocessing of laboratory glassware for analytical purposes and ensure gentle material care.

Chemical properties are the key to retaining the value of high-quality laboratory glassware as durable materials combined with gentle cleaning processes minimise the risk of glass corrosion.
Thanks to such excellent chemical properties such as
- Hydrolytic resistance, Class 1 (ISO 719)
- Resistance to acids, Class 1 (DIN 12116)
- DURAN® glassware is ideally suited to multiple cleaning operations and guarantees excellent durability.

At the same time, the superior physical properties of DURAN® glass makes it ideal for laboratory use.
- Uniform wall thickness throughout
- Results in greater mechanical stability and improved resistance to thermal cycling (ΔT=100K)
- Prevents tension in glass and the risk of cracking when heated and cooled
- Advantages: Greater safety for staff, enhanced durability, protection for valuable substances
- Retraceable back to raw materials
- Batch certifications can be downloaded on Internet

DURAN offers a wide range of high-quality DURAN® laboratory glassware products. Miele and Duran. Two strong brands in the laboratory.

Lab washers
G 7883, G 7893, G 7883 CD

All-rounder with large cabinet and short programme cycles

Freestanding/built-under unit
G 7883
- White or stainless steel casing
- Width only 60 cm
  H 850 (820*), W 600, D 600 mm
- MULTITRONIC Novo Plus controls with 10 programmes
- Circulation capacity: 400 l/min
- Integrated dispenser pump for liquid process chemicals (neutralising agent)
- Throughput per cycle:
  e.g. 39 narrow-necked glasses or 116 pipettes

Washer-disinfector with integrated hot air drying

Freestanding/built-under unit
G 7893
- Stainless-steel casing
- Width only 60 cm
  H 850 (820*), W 600, D 600 mm
- MULTITRONIC Novo Plus controls with 10 programmes
- Circulation capacity: 400 l/min
- Drying Plus: Integrated hot-air drying
- Integrated dispenser pump for liquid process chemicals (neutralising agent)
- Reprocessing per cycle:
  e.g. 37 narrow-necked glasses or 96 pipettes

Illustration shows machine with lid

Washer-disinfector with integrated hot-air drying unit and drawer for supply canisters

Freestanding/built-under unit
G 7883 CD
- Stainless-steel casing
- Width only 90 cm
  H 820 (850*), W 900, D 700 mm
- MULTITRONIC Novo Plus controls with 10 programmes
- Circulation capacity: 400 l/min
- Integrated hot-air drying unit
- Drawer for 2 x 5 l supply canisters
- 2 integrated dispenser pumps for liquid process chemicals (alkaline detergent/ neutralising agent)
- Reprocessing per cycle:
  e.g. 37 narrow-necked glasses or 96 pipettes
- Illustration shows machine with lid

Optional version with gaskets with improved oil and grease resistance for use in petrochemical, cosmetics and food-processing industry.

Technical data cf. Page 44

* Built-under unit

Lab washers
G 7883, G 7893, G 7883 CD

Illustrated: G 7883

Miele quality – Made in Germany
Reliable washers for analytically pure results are pivotal to the smooth everyday running of busy laboratories. Miele lab washers are uncompromising in terms of quality, offering users both economical and practical benefits. Each and every machine detail is closely geared to the requirements of laboratories requiring optimised processes, reproducible results and a high degree of reliability.

Made in Germany

High-quality design
In designing these machines, Miele uses choice, durable and robust materials. This results in rugged and maintenance-free machines able to meet
everyday rough and tumble.
- Double-skinned design, insulated door for excellent soundproofing
- Chamber and hydraulic circuit made from high-grade stainless steel
- Fibre-reinforced hoses

Cleaning technology
- Hygienic freshwater system with fresh water intake in each programme stage
- 2 spray arms (third spray arm on upper basket) for thorough cleaning of laboratory glassware
- Optimum arrangement of spray nozzles and regulatable spray arm speed for best possible cleaning results
- Thorough cleaning of lumens with injector system

Standard features
- Profi Monobloc water softener, reactivation internalised into programme cycle, low salt consumption
- Powerful circulation pump, max. throughput 400 l/min
- 4-fold filtration system with surface filter, coarse filter, glass splinter filter and micro-fine filter.
- High-performance steam condenser
- Flowmeter to monitor water intake quantities
- Integrated dispenser pump(s) for liquid products
- Connection option for liquid dispensing systems
- Hot-air drying on G 7893 and G 7883 CD

Interfaces
- Serial interface for process documentation, can be extended to include USB interface for PC connection (depending on model)

Safety devices
- Electric door lock
- Programme recontinuation in event of power outage
- Optical and acoustic signal at end of programme
- 2 redundant sensors, 1 each for temperature control and monitoring
- Port for simple positioning of sensors in the wash chamber for machine or process validation

Illustration shows:
G 7893 lab washer

Quality, inside and out

Drying Plus
Miele offers a washer-disinfector with Drying Plus integrated drying and a width of only 60 cm. Miele's new machine concept enables the comprehensive reprocessing of laboratory glassware, comprising thorough cleaning, safe disinfection and very effective drying.

Even laboratory glassware with irregular and complex shapes is properly reprocessed thanks to Miele's hot-air drying. An integrated S-class H 12 HEPA filter guarantees that the air used for drying is perfectly clean. Filter replacement is simple and achieved by opening the service panel at the bottom of the machine.

Miele's new G 7893 washer-disinfector meets all requirements, offering Miele's proverbial quality – Made in Germany.

The benefits of the G 7893 washer-disinfector with Drying Plus
- Small footprint, only 60 cm wide
- Large chamber with integrated drying
- Efficient, fast drying
- Drying time selectable in 5-minute increments
- Fast drying using hot air
- No time-consuming post-processing or drying of load items
- Excellent material compatibility
- Optimum drying of plastic items
- Hygienic drying using HEPA filters
- Dry instruments for safe subsequent sterilisation

On left:
G 7893 lab washer

O 175 TA upper basket
and U 874/1 lower basket
with following inserts:
E 106, E 109

On right:
G 7893 lab washer
Connection for hot-air drying

Controls · Programmes · Cycle times
G 7883, G 7893, G 7883 CD

Fully electronic controls, high-level process security
Programmes and functions on Miele G 7883 and G 7893 CD lab washers are reliably controlled and monitored by MULTITRONIC controls. The majority of routine reprocessing tasks are covered by standard programmes. Modifications to programme cycles can be made via the semi-programmable controls. Miele washer-disinfectors have a serial interface which can be converted to USB for PC connection, depending on the model. This offers the opportunity to document the entire process using optional software or a printer. The protocol contains key programme data such as running times, temperatures, dispensing and information on errors and manual intervention.

Excellent user convenience
All symbols on the fascia panel are self-explanatory. The machine status is indicated at any given time via control lamps. A 3-digit 7-segment indicator in the display with its own toggle switch can be used to display the remaining programme Duration or the current washing/disinfection temperature. Status and control indicators monitor the process and inform of faults and the need for servicing.

Features and functions
- Multitronic Novo Plus electronic controls
- 10 standard washing and disinfection programmes
- Semi-programmable controls
- 2 free programme slots for customised programmes - programmable by Service.
- Rotary programme selector switch
- Programme sequence indicator and fault and service indicators
- Temperature and programme Duration indicator

Programmes · Cycle Durations · Energy consumption

G 7883/G 7893/G 7883 CD	Washing G 7883/G 7893/G 7883 CD					Drying G 7893/G 7883 CD	
	Cycle Duration	CW	HW	AD	Energy	Cycle Duration	Energy
	[mins.]	[l]	[l]	[l]	[kWh]	[mins.]	[kWh]
SPECIAL 93°-10'	39	11.5	14.0	9.5	2.5	35	0.9
VARIO TD	39	21.5	14.0	9.5	2.3	35	0.9
Vacant programme slot (Prog. A)	32	12.0	24.5	18.5	2.0	30	0.7
ANORGANICA (PRG. B)	35	11.0	19.5	23.5	2.2	30	0.7
ORGANICA (PRG. C)	34	2.0	35.0	18.5	2.1	30	0.7
STANDARD (PRG. D)	28	2.0	19.5	18.5	1.7	30	0.7
UNIVERSAL (PRG. E)	31	12.0	24.5	18.5	2.0	30	0.7
INTENSIVE (PRG. F)	38	12.0	19.5	28.0	2.4	30	0.7
Plastics (PRG. G)	26	34.5	0.0	18.5	1.7	40	0.5
Rinse	3	10.0	0.0	0.0	0.02	–	–

Heating: 9 kW (3N AC 400 V 9.7 kW),
excl. steam condenser
Connection to cold water (15°), hot water (65°) and demineralised water (15°)

High performance, efficient use of energy

Miele washer-disinfectors offer a large inner cabinet with 2 wash levels (upper and lower baskets) for laboratory glassware and accessories. Direct docking of the upper basket onto the water circulation system reduces water consumption per cycle. Even the volume of water entering the machine is carefully metered: A flowmeter monitors water intake quantities and thereby ensures precise detergent concentrations. Water and effluent costs are reduced accordingly.

Illustration shows: PG 8536 lab washer

Lab washers
PG 8535 and PG 8536

PG85 Perfection Guaranteed

Illustration shows machine with lid

Compact high-tech washer-disinfector with freely programmable controls

Washer-disinfector
PG 8535

- Built-under/freestanding units
- Stainless-steel casing
- Width 90 cm
- H 820* (850), W 900, D 700 mm
- Freely programmable PROFITRONIC+ controls with 17 programmes and 30 vacant programme slots
- Network interface for process documentation
- 400 l/min circulation pump capacity
- PerfectSpeed Sensor spray arm monitoring
- 3-phase supply for short programme cycles
- 2 bellows-type dispenser pumps for liquid detergent and neutralising agent
- Drawer with 2 supply canisters, 5 l each
- Integrated hot-air drying unit
- Reprocessing per cycle: e.g. 37 narrow-necked glasses or 96 pipettes

Compact high-tech washer-disinfector with freely programmable controls

Washer-disinfector
PG 8536

- Freestanding unit
- Stainless-steel casing
- Width 90 cm
- H 1175, W 900, D 700 mm
- Freely programmable PROFITRONIC+ controls with 18 programmes and 30 vacant programme slots
- Network interface for process documentation
- High-performance units with water circulation capacity of 600 l/min
- PerfectSpeed Sensor spray arm monitoring
- 3-phase supply for short programme cycles
- 2 integrated, maintenance-free bellows-type dispenser pumps liquid detergent and neutralising agent, incl. PerfectFlow ultrasound volumetric dispensing
- Drawer with 4 supply canisters, 5 l each
- Integrated hot-air drying unit
- Reprocessing per cycle: e.g. 66 narrow-necked glasses or 96 pipettes

Optional version with gaskets with improved oil and grease resistance for use in petrochemical, cosmetics and food-processing industry.

* Built-under unit

PG85 PerfectTouchControl

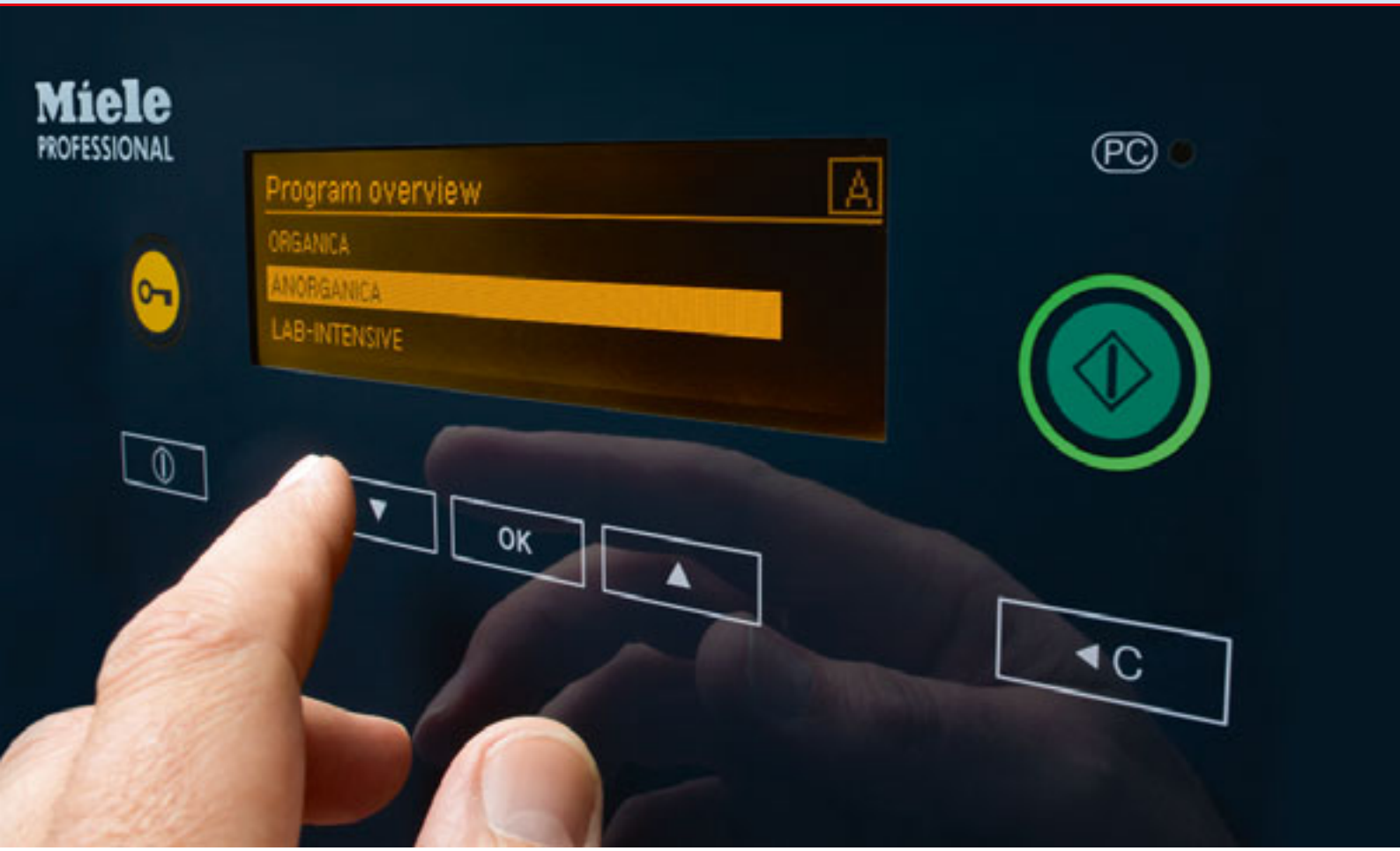

- **Optimum user convenience**
- **Reliable hygiene**
- **Perfect control**

Exclusive to MIELE

- Freely programmable controls
- Chemical-resistant glass surfaces
- Innovative programme cycles

PerfectTouch Control
Simple to use, easy to clean: Washer-disinfectors from the PG 85 series feature a touch-sensitive display. This easy-to-use PerfectTouch display guarantees unique user convenience combined with superb hygiene. A fully flush, chemical-proof display screen makes for simple and effective wipe disinfection.

The controls are outlined on the glass surface and slight pressure is enough to activate functions and launch programmes, even when wearing protective gloves. The man-machine interface involves the use of only a very limited number of controls; all steps in the process appear in the display in the user's own language. Display texts, for example for the actual temperature, conductivity, countdown times and all other protocol data can be defined individually.

Features and functions
- Freely programmable PROFITRONIC+ controls
- 64 programme slots
- 18 standard programmes, 15 service programmes
- 30 vacant programme slots
- User interface with local-language display
- Configurable display and protocols
- 4 operating levels ranging from simple operative to power user
- Delay start and countdown indicator
- Wide range of programming options, e.g. for client-specific programmes assigned to vacant programme slots
- Automatic mobile unit recognition for automatic programme selection

Controls · Programmes · Cycle times
PG 8535, PG 8536

Programmes · Cycle Durations · Energy consumption

PG 8536	Cleaning					Drying*	
	Cycle Duration	CW	HW	AD	Energy	Cycle Duration	Energy
	[mins.]	[l]	[l]	[l]	[kWh]	[mins.]	[kWh]
LAB-STANDARD	33	8.5	38.5	18	2.6	34.3	0.6
LAB-UNIVERSAL	35	8.5	55	21	2.3	34.3	0.6
LAB-INTENSIVE	43	8.5	40	48	2.7	34.3	0.6
LAB-PIPETTES	46	11.5	74.5	44	2.5	34.3	0.3
PLASTICS	38	62.5	-	20	2.5	44.6	0.4
ORGANICA	41	1	64	21	2.8	34.3	0.6
ANORGANICA	43	4	49	48	2.4	34.3	0.6
LAB-OIL	47	1	80.5	21	2.5	34.3	0.3
DES-VAR-TD	54	36.3	24.2	16	3.7	34.3	0.6
SPECIAL 93/10	48	22	25.5	15.5	3.97	39.3	0.7

* with 6-minute steam condensation pause (No. 48-50 4.33 mins.)

Heating: 9 kW (3N AC 400 V 10.2 kW)

Connection to cold water (15°), hot water (65°) and demineralised water (15°)

Programmes · Cycle Durations · Energy consumption

PG 8535	Cleaning					Drying	
with steam condenser	Cycle Duration	CW	HW	AD	Energy	cycle Duration*	Energy
	[mins.]	[l]	[l]	[l]	[kWh]	[mins.]	[kWh]
SPECIAL 93°-10'	41	14.7	16.8	11	2.5	39	0.7
DES-VAR-TD	41	23.7**	16.8	11	2.3	34	0.5
SHOE-TD-75/2	24	18.0	23.5	0	1.0	39	0.4
LAB-STANDARD	33	7.3	16.3	22	2.0	34	0.6
ORGANIC	41	2.0	32.0	25	2.1	34	0.6
INORGANIC	39	2.0	32.0	34	1.5	34	0.6

*Programme Duration with steam condensation pause and gentle start

**Cool-down function (CW: +4.5 l/cycle: + 1.75 mins) applies if initial temperature of > 35°C applies

Heating: 9 kW (3N AC 400 V 9.7 kW)

Connection to cold water (15°), hot water (65°) and demineralised water (15°)

Note:

Model PG 8535 features the same programmes as the PG 8536.

Further information on programme durations, etc., on request.

PG85 PerfectPureSensor

- **Continuous conductivity monitoring**
- **Pure results for analytical chemistry**
- **Safe reprocessing**

Exclusive to MIELE

- Maintenance-free conductivity monitoring

PerfectPure Sensor
Chemical residue and even the finest traces of deposits on laboratory glassware can impair the results of subsequent experiments, particularly in analytical chemistry and biology. On request, the PG 8536 can be fitted with Miele's new, patented PerfectPure conductivity monitor. Conductivity monitoring reliably detects the presence of minerals in the rinse water, such as the dissolved salts introduced with alkaline or acidic process chemicals, limiting them to a threshold level defined by the user.

Residue is determined as a function of conductivity. Measuring and monitoring is achieved using a contact-free and hence maintenance-free system which is able to monitor conductivity conditions with exceptionally low tolerance levels in ranges from 5 – 40 S/cm and 40 S/cm – 100 mS/cm. Depending on machine settings, conductivity readings can even be used to control the programme cycle. This allows the number of necessary rinse cycles to be determined automatically if conductivity is outside the predetermined range: In the event that the target conductivity reading specified by the user is not achieved in the final rinse cycle, further water intake cycles are automatically added. Monitoring results can be shown in the display and documented accordingly.

PG85 PerfectFlowSensor

- **Continuous monitoring of dispensed volumes**
- **Precise results, user-defined tolerances**
- **Perfect dispensing control**

Exclusive to MIELE

- Extremely precise
- Precision independent of temperature and viscosity of dispensed products

PerfectFlow Sensor
A decisive factor contributing to good reprocessing results is the precise volumetric control of dispensed chemicals. Miele's new PerfectFlow sensor using ultrasound technology offers considerably greater safety margins than conventional systems. The PerfectFlow Sensor is a standard feature on the PG 8536 and guarantees a hitherto unparallelled degree of precision in controlling and monitoring volumetric flow, independent of viscosity and ambient temperatures. The monitoring system is fully independent of the dispensing system and can be adjusted and calibrated. Dispensing tolerances can be set individually by users; chemicals are dispensed efficiently and reliably, irrespective of the type of product or ambient conditions (continuous operation, fluctuating climatic conditions). Any deviation from the target quantities are safely detected and the reproducibility of validated processes guaranteed. An error message is issued or the programme is aborted if values are outside tolerance range.

PG85 PerfectSpeedSensor

PG85 PerfectHepaDrying

- **Precisely monitored reprocessing**
- **Improved reproducibility of validated processes**
- **Perfect washing and disinfection results**

Exclusive to MIELE

- Spray arm monitoring on **all** levels
- Spray arm speed monitoring

PerfectSpeed Sensor
To guarantee perfect and safe cleaning and disinfection results, the rotational speed of the spray arms must be within defined limits. With the new PerfectSpeed sensor, the precise speed of each individual spray arm is carefully monitored and documented – whether in the cabinet or on board baskets and mobile units. The spray arm monitoring feature uses a sensor strip located outside the cabinet to detect the passage of spray arms and to ensure that speeds are within range. Information shown in the display indicates whether the values are correct or whether the user must intervene on account, for example, of excessive foam slowing spray arm motion down.

In the event of a deviation from target values, either an error message is issued or the programme is interrupted immediately to allow the user to deal with the cause of the fault, depending on system parameters. Deviations can also be recorded in the automatic process documentation.
Spray arm sensing, a standard feature on the PG 8535 and PG 8536, offers effective protection against spray arm blockages by items in the load and also provides information on pressure conditions in the machine and in mobile units and baskets. Spin speeds provide a valuable indication as to the reproducibility of validated processes, increasing safety margins in machine-based instrument reprocessing systems by a considerable degree.

- **Optimum drying results**
- **High level of air purity in chamber**
- **High standards of hygiene**

PerfectHEPA Drying
New hygiene standards and the use of innovative Miele technology also applies to the drying phase. The new Class H 13 high-temperature HEPA filter, located directly upstream from the cabinet, prevents the admission of unwanted air-borne particles from room air. This ensures exceedingly high levels of air purity in the cabinet. Thanks to streamlined air ducting, PerfectHEPA Drying also ensures excellent drying performance.

PG85 PerfectDoc

- **Continuous process documentation**
- **Connection to laboratory network**
- **Wide range of parameters documented**
- **Perfect process traceability**

Exclusive to MIELE

- Wide range of parameters including temperature, dispenser volume, conductivity and spray arm rotation

PerfectDoc
The PG 8535/36 is fitted with a network interface for process documentation as a standard feature. This PerfectDoc module allows communication with Segosoft Miele Edition documentation software. This facilitates the recording of many process parameters, including temperatures, as well as the documentation of entire process protocols including plotting temperature graphs, dispensed quantities, spray arms speeds and conductivity readings. Alternatively, documentation can also be achieved using a printer connected to one of the machine's serial interfaces. Further information on process documentation is provided on Pages 20- 23.

Performance comparison within machine categories

Washer-disinfector	**Cabinet dimensions** H / W / D [mm] **Chamber volume** [l]	**Wash performance** [items]	**Wash performance** [items]
G 7883	500/535/ O = 474 U = 516 125	39 narrow-necked glasses	116 pipettes
G 7893	500/535/ O = 474 U = 516 125	37 narrow-necked glasses	96 pipettes
G 7883 CD	500/535/ O = 474 U = 516 125	37 narrow-necked glasses	96 pipettes
PG 8535	500/535/ O = 474 U = 516 125	37 narrow-necked glasses	96 pipettes
PG 8536	500/535/ O = 474 U = 516 125	66 narrow-necked glasses	96 pipettes
G 7825/G 7826	683/541/610 225	108 narrow-necked glasses	104 pipettes
PG 8527 / PG 8528	675/650/800 351	232 narrow-necked glasses	232 pipettes

O = Upper basket, U = Lower basket

Quality management and documentation

Process documentation principles
The documentation of reprocessing represents a significant contribution towards quality management in laboratories. Proof that a validated process can be replicated with each cycle is best achieved by recording and documenting the most important programme parameters on a continuous basis.

Miele Professional offers its own complete process documentation package. The heart and soul of the system is the Segosoft Miele Edition documentation software. Depending on the requirements of clients and on-premise conditions, various documentation solutions are available. Miele machines and their software are an ideal match and interact perfectly.

The user-friendly Segosoft Miele Edition allows full traceability and secure documentation of reprocessing operations. Traceability is guaranteed by recording process protocols and plotting temperatures and pressures - information is provided by the machine itself via an interface.

Digital documentation
Documentation is entirely paperless, saving valuable filing space. This represents a huge and convincing benefit compared with manual documentation using forms and templates. Documents are created by the Segosoft Miele Edition in PDF/A-1 format in compliance with the ISO 19005-1:2005 standard. This format was specially designed for long-term archiving and ensures excellent legibility over time. The software also allows loads and cycles to be approved with a user ID and password. Legally, this has the same status as a written signature on a document. This is the result of new legislation in many countries which has made digital signatures legally valid. This digital signature reveals any subsequent changes to documents and reliably prevents manipulation.

Documentation made simple
Segosoft Miele Edition excels in terms of speed, simplicity and efficiency gains. Once a Miele washer-disinfector commences operation, the software automatically logs all relevant data during the reprocessing cycle. Where appropriate, the user can assess reprocessing results at a computer and approve charges using a user ID and password. In all, the approvals process takes less than
10 seconds.

Segosoft®
Miele Edition

Process documentation options

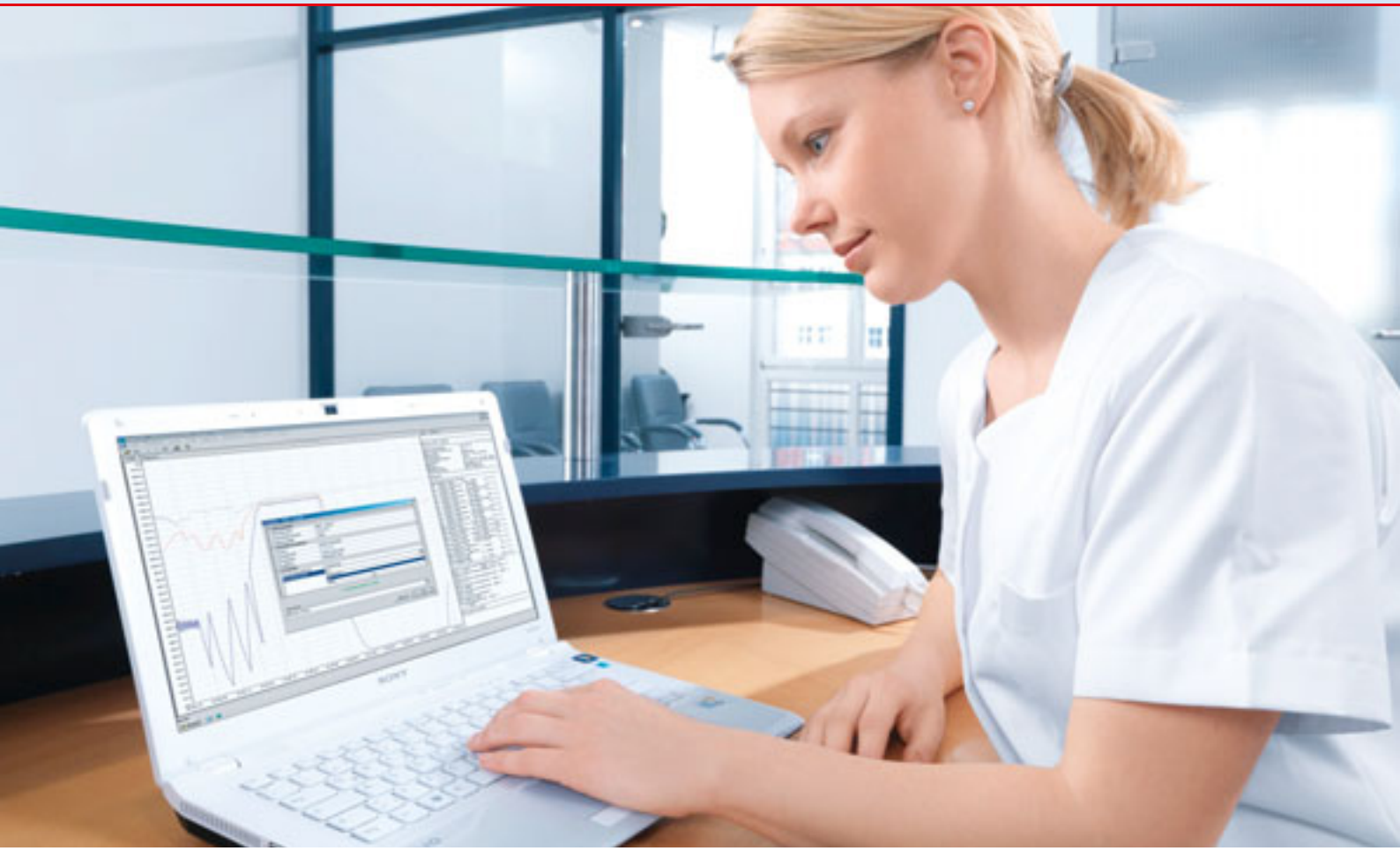

Documentation of instrument reprocessing can be performed in a variety of ways, depending on clients' wishes and laboratory conditions.

1. Electronic documentation: Direct link to a PC

The washer-disinfector is connected via a cable to a computer on which the documentation software is installed. This computer can be a netbook, laptop or PC in the same room or an existing computer, for instance, in a neighbouring office.

- Short distances and simple handling by approving loads on-site
- Most versatile solution when connecting 2 or more machines in the same room
- Automatic data transfer from machine to software
- Digital archiving

2. Electronic documentation: Network connection

The washer-disinfector is connected to the laboratory's own computer, for instance a PC, running documentation software.

- Use of existing computer
- Automatic data transfer from machine to software
- Digital archiving

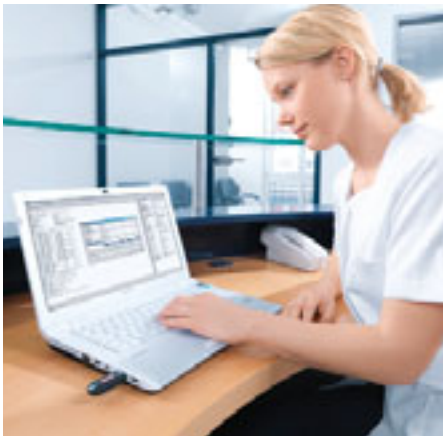

3. Electronic documentation using USB stick
Process data from washer-disinfectors can be saved to a USB stick for subsequent transfer to documentation software.
- Low costs for computer and network infrastructure
- Use of existing computer
- Digital archiving

4. Process documentation via printer
Process data output via receipt printer in laboratory.
The printouts are filed.

Comparison of documentation options

	Direct PC connection	Network connection	Documentation via USB	Printer
Documentation: Process protocol	•	•	•	•
Documentation: Temperature	•	•	–	–
Simple digital signature	–	–	•	–
Advanced digital signature with reference to user	•	•	–	–
Manual approval with signature	–	–	•	•
Digital approval with user name/password	•	•	–	–
Convenience of short distances	+++	++	++	+++
Paperless filing	•	•	•	–
Data backup function	•	•	–	–

• = available – = not available + = evaluation scale

Segosoft Miele Edition
Products and accessories

Segosoft Miele Edition
Process documentation software
For use in direct PC connections or network connections
Network connection

'Comfort Plus' package with extended functionalities
- Documentation of process data, routine checks, maintenance
- Advanced digital signature with reference to user in PDF document
- User-referenced approval of process protocols with user name and password
- User administration for any number of user names/passwords
- Backup function for automatic data backup

Range of services:
- Software CD, software package: Comfort Plus, Installation instructions
- Licence card for 1 machine
- Optional: Additional licence for further units
- Free support
  Free over-the-telephone installation support for 30 days, software installation and start-up instructions

Connectable model types:
- Serial connection: max. 4 machines, Network connection: Any number of machines

Connection cables to be ordered separately

Segosoft Miele Edition, USB solution
Process documentation software
for data transfer using USB stick

'Comfort' software package with basic functionalities:
- Documentation of process data
- Simple digital signature
- User-referenced approval on enclosed signature pad

Range of services:
Complete package for 1 machine
- Software CD, software package: Comfort, installation instructions
- USB stick
- USB data logger Dimensions (H x L x W): 35 x 118 x 85 mm,
  incl. 230 V transformer, 1.8 m supply lead
- Serial interface cable to connect machine and data logger
  (cable length: 3 m)

Connectable model types:
- max. 1 machine

Net500 network converter
Net500 network converter for connection of machines with serial interface to office network, data conversion from RS 232 to network format (TCP/IP)
- Network converter Dimensions
  (H x L x W): 37 x 132 x 102 mm,
  incl. 230 V transformer, 1.4 m supply lead

PRT100 protocol printer
Printer to print process protocols, ink-jet printer with indelible ink

Further additional components
To connect a machine to a PC, Miele offers a range of approved cables. Miele can also advise on the choice of suitable software and hardware.

Segosoft®
Miele Edition

Miele
PROFESSIONAL
Miele
PROFESSIONAL

Miele Sales and Service – A full range of benefits

Good advice is the key to success
Miele's advisory service sets in long before machines are installed. Miele specialists provide
expert support in helping select the most appropriate machines and assist in performing extensive feasibility studies. Where needed, Miele also offers financing models.
- Advice on machine selection
- Economic feasibility calculation
- Attractive financing

Comprehensive service package from one single source
Even as early as when a new machine is delivered, Miele supports clients by providing a comprehensive range of services. From the word 'go, work is performed on tie with due care and diligence and in full compliance with relevant legislation by carefully trained Miele service engineers.

Your benefits:
- High-quality service with short response times and blanket service coverage provided by specialised medical product service engineers (e.g. over 150 technicians in Germany alone)
- On-site servicing is guaranteed within 24 hours of receiving a call thanks to short distances.
- Expert application technology advice
- 90% of service visits result in first-time fixes
- Reliable spares service (even as long as 15 years after the discontinuation of series production in the case of key functional spares)

Customised service contracts
Miele's inspection and maintenance contracts ensure that Miele machines are inspected at regular intervals by specially trained Miele after-sales service engineers. The proper functioning and safety of all key components is analysed. Machine uptime and smooth operation is ensured by replacing spare parts at an early juncture. This considerably minimises the downtime risk.

Inspections and preventative maintenance help ensure that machines retain their value and represent a good long-term investment.

Miele offers the following service contracts:

Inspection contract
An inspection contract covers the following:
- Annual inspection incl. comparison of readings
- Detailed assessment and documentation of technical state of repair
- Maintenance check
- Electrical safety inspection
- Thermoelectric test

Maintenance contract
In addition to the services provided by the inspection contract, a maintenance contract offers the following benefits:
- Extensive maintenance based on specific Miele service plan for the model concerned
- Offers submitted for further preventative maintenance and repair work
- Pre-emptive replacement of defined high-mortality parts
- Necessary safety checks

Should further repair work be necessary, this is invoiced separately.

Full-service maintenance contract
Miele's full-maintenance contract offers good financial forward visibility. In addition to the services provided under the maintenance contract, it also covers the costs of any necessary repairs. The cost of spares, parts subject to wear and tear, call-out charges and labour costs are assumed by Miele

Kundenmonitor® Deutschland
TESTSIEGER
Seit vielen Jahren!
Miele

Miele
PROFESSIONAL

Miele Service Pack: Qualification of cleaning systems

In the pharmaceutical, food-processing and cosmetics industries, all cleaning systems used in production, quality assurance and R&D must be 'qualified'.

Qualification involves the following: Design Qualification (DQ), Installation Qualification (IQ), Operation Qualification (OQ), Performance Qualification (PQ) and, in some cases, process validation. In all cases, responsibility for implementing the necessary measures lies with the equipment operator. Miele's in-house after-sales service operation, though, can provide support by assuming some of the duties incumbent on the operator. Miele's tailored service package covers Installation and Operation Qualification (IQ/OQ).

Implementation
Before IQ/OQ can be performed by Miele's in-house service engineers the necessary documentation must be compiled, checked and approved by the operator for use during the inspection. Miele service technicians will then perform qualification on the basis of this documentation. All the necessary calibrated and certified test apparatus is provided by Miele.

Training of service engineers
Miele's own service engineers are given training covering all aspects of machine technology (installation, programming, repair and maintenance) in regular refresher courses. This is complemented by specialised training on the qualification of Miele cleaning systems used in industrial and laboratory operations. Theory and practice are not confined to washer-disinfectors either: they also cover all peripheral units likely to be encountered in industrial applications (for example Miele's Aqua Purificator to produce demineralised water, dispensing systems and accessories such as mobile injector units and inserts).

Installation Qualification (IQ)
The objective of Installation Qualification is to verify that the cleaning system and its installation comply with the operator's and manufacturer's requirements. During the IQ inspection, Miele service engineers document, check and assess the following: Compliance of shipment with original order, unit configuration and condition, installation and connection to on-site utilities and the calibration of certain measuring systems.

Operation Qualification (OQ)
The objective of Operation Qualification is to furnish proof that the cleaning system meets the requirements of the operator and equipment manufacturer when installed and connected. Operation Qualification documentation, inspections and evaluation cover functions with a relevance to safety and operation, process-related messages and warnings, and programme sequence.

Training of operatives and the documentation of such measures is also carried out during Operation Qualification. This constitutes a comprehensive package comprising IQ/OQ paperwork, the services of highly skilled and qualified service engineers and the use of calibrated, certified test apparatus.

Kundenmonitor® Deutschland
TESTSIEGER
Seit vielen Jahren!
Miele

Upper and lower baskets

O 188/2 upper basket/open front
For use in G 7883, G 7893, G 7883 CD, PG 8535 and PG 8536
- Open front
- For various inserts
- Vertical clearance 165 mm
- Height adjustment +/20 mm
- Built-in spray arm with magnet
- Note: Magnet for spray arm sensors on PG 8535, PG 8536
- H 215, W 531, D 475 mm

O 190/2 upper basket/open front
- As O 188
- Vertical clearance 215 mm
- Built-in spray arm with magnet
- Note: Magnet for spray arm sensors on PG 8535, PG 8536
- H 265, W 531, D 475 mm

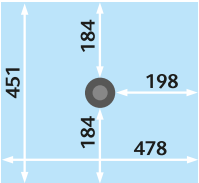

U 874/1 lower basket/open front
For use in G 7883, G 7893, G 7883 CD, PG 8535 and PG 8536
- Open front
- For various inserts
- Vertical clearance in combination with upper basket:
  O 175 TA approx. 230 mm
  O 184 TA approx. 205 mm
  O 187 approx. 225 +/– 20 mm
  O 188/1 approx. 270 mm +/– 20 mm
  O 190/1 approx. 220 mm +/– 20 mm
- With holder for ML/2 magnetic strip for automatic mobile unit recognition
- H 50, W 534, D 515 mm

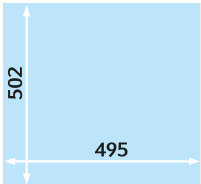

Upper and lower baskets

O 175 upper basket/injector unit TA
For use in G 7893, G 7883 CD,
PG 8535 and PG 8536
- For 33 narrow-necked glasses
- Vertical clearance 170 mm*
- Connection for hot-air drying
- H 250, W 531, D 475 mm,
  H with drying unit connection 412 mm
- Powder dispensing not possible

Supplied as standard with:
- 33 nozzles (E 351), 4 x 160 mm
- 33 x clips for nozzle
  4 x 160 mm (E 353)

O 187 upper basket/injector unit
For use in G 7883, G 7893, G 7883 CD,
PG 8535 and PG 8536
- For 34 narrow-necked glasses
- Vertical clearance 170 mm*
- H 250, W 531, D 475 mm
- Powder dispensing not possible

Supplied as standard with:
- 34 nozzles (E 351), 4 x 160 mm
- 34 x clips for nozzle
  4 x 160 mm (E 353)

O 184 upper basket/injector unit TA
For use in G 7883, G 7893, G 7883 CD,
PG 8535 and PG 8536
- For items such as centrifuge tubes,
  phials, test tubes for fraction collectors or
  autosampler tubes
- Vertical clearance 170 mm
- Connection for hot-air drying
- H 260, W 531, D 475 mm,
  H with drying unit connection 468 mm
- Powder dispensing not possible

Supplied as standard with:
- 96 jets 2.5 x 110 mm with plastic supports

U 175/1 Lower basket/Mobile injector unit
For use on PG 8536
- For 33 narrow-necked glasses
- Vertical clearance approx. 170 mm*
- Only for use in conjunction with
  O 175/O 187/O 184 upper baskets
- H 250, W 531, D 475 mm

Supplied as standard with:
- 33 nozzles (E 351), 4 x 160 mm
- 33 x clips for nozzle (E 353),
  4 x 160 mm
- 1 irrigation nozzle

U 184/1 Lower basket/Mobile injector unit
For use on PG 8536
- For items such as centrifuge tubes,
  phials, test tubes for fraction collectors or
  autosampler tubes
- Only for use in conjunction with
  O 175, O 187, O 184 upper baskets
- Vertical clearance approx. 170 mm
- H 250, W 531, D 515 mm

Supplied as standard with:
- 96 jets 2.5 x 90 mm with plastic supports

* Vertical clearance may be less, depending on type of laboratory glassware

Mobile injector units for narrow-necked glassware

E 355 mobile injector unit 1/2
For use in G 7883
- For 16 narrow-necked glasses
- One half vacant for other inserts

Supplied as standard with:
- 7 x E 351 injector nozzles, 4.0 x 160 mm
- 7 x E 353 clip for nozzles, 4.0 x 160 mm
- 9 x E 352 injector nozzles, 6.0 x 220 mm
- 9 x E 354 clip for nozzles, 6.0 x 220 mm
- 1 x irrigation nozzle for powder dispenser

E 385 mobile injector unit 1/2 TA
For use in G 7893, G 7883 CD, PG 8535 and PG 8536
- As E 355 universal mobile unit, but with connection for hot air drying unit
- With holder for ML/2 magnetic strip for automatic mobile unit recognition

Supplied as standard with:
- 7 x E 351 injector nozzles, 4.0 x 160 mm
- 7 x E 353 clip for nozzles, 4.0 x 160 mm
- 9 x E 352 injector nozzles, 6.0 x 220 mm
- 9 x E 354 clip for nozzles, 6.0 x 220 mm
- 1 x irrigation nozzle for powder dispenser

E 350 mobile injector unit 1/1
For use in G 7883
- For 33 narrow-necked glasses

Supplied as standard with:
- 15 x E 351 injector nozzles, 4.0 x 160 mm
- 15 x E 353 clip for nozzles, 4.0 x 160 mm
- 18 x E 352 injector nozzles, 6.0 x 220 mm
- 18 x E 354 clip for nozzles, 6.0 x 220 mm
- 1 x irrigation nozzle for powder dispenser

E 380 mobile injector unit 1/1 TA
For use in G 7893, G 7883 CD, PG 8535 and PG 8536
- For 32 narrow-necked glasses
- Connection for hot-air drying
- With holder for ML/2 magnetic strip for automatic mobile unit recognition

Supplied as standard with:
- 14 x E 351 injector nozzles, 4.0 x 160 mm
- 14 x E 353 clip for nozzles, 4.0 x 160 mm
- 18 x E 352 injector nozzles, 6.0 x 220 mm
- 18 x E 354 clip for nozzles, 6.0 x 220 mm
- 1 x irrigation nozzle for powder dispenser

Mobile injector units for narrow-necked glassware
Injector mobile unit for pipettes

E 340 mobile injector unit 1/2
For use in G 7883
- For 19 narrow-necked glasses
- One half vacant for other inserts

Supplied as standard with:
- 3/3/3 nozzles, 4.0 x 140/160/180 mm
- 3/3/4 nozzles, 6.0 x 200/220/240 mm
- 1 x irrigation nozzle for powder dispenser

E 329 mobile injector unit 1/1
For use in G 7883
- For 39 narrow-necked glasses

Supplied as standard with:
- 4/5 Nozzles 2.5 x 90/110 mm
- 5/5/5 nozzles, 4.0 x 140/160/180 mm
- 5/5/5 nozzles, 6.0 x 200/220/240 mm
- 1 x irrigation nozzle for powder dispenser

E 414 mobile injector unit 1/1 TA
For use in G 7893, G 7883 CD, PG 8535 and PG 8536, as per E 329, but for 37 narrow-necked glasses
- Connection for hot-air drying
- With holder for ML/2 magnetic strip for automatic mobile unit recognition

Supplied as standard with:
- 4/3 Nozzles 2.5 x 90/110 mm
- 5/5/5 nozzles, 4.0 x 140/160/180 mm
- 5/5/5 nozzles, 6.0 x 200/220/240 mm
- 1 x irrigation nozzle for powder dispenser

E 406 Mobile injector unit
For use in G 7883
- For 116 pipettes up to 450 mm
- Compartment size 16 x 16 mm.
- Complete with retaining frame, height 150 mm
- H 502, W 533, D 516 mm

E 408 TA injector mobile unit
For use in G 7893, G 7883 CD, PG 8535 and PG 8536
- As E 406 but for 96 pipettes
- Connection for hot-air drying
- With holder for ML/2 magnetic strip for automatic mobile unit recognition

E 405/1 mobile injector unit with drying connection
For use in G 7893, G 7883 CD, PG 8535 and PG 8536, as per E 404/1
- Connection for hot-air drying
- With holder for ML/2 magnetic strip for automatic mobile unit recognition

E 404/1 mobile injector unit
For use in G 7883
- For 38 pipettes in 3 rows:
  Row 1 10 pipettes 100 ml
  (length up to 550 mm),
  spacing 20 mm,
  Row 2 14 pipettes 25 ml
  Spacing 26 mm
  Row 3 14 pipettes 10 ml
  Spacing 26 mm

Insert for micro-titre plates, Mobile injector unit for butyrometers

E 494 insert 1/2
- For 5 micro-titre plates
- H 35, W 205, D 440

E 331 mobile injector unit 1/1
For use in G 7883, G 7893, G 7883 CD, PG 8535 and PG 8536
- For 39 butyrometers

Supplied as standard with:
- 39 SD-B injector nozzles for butyrometers
- 1 rinse nozzle for powder dispenser

SD-B Injector nozzle for butyrometers
- For E 331 mobile unit
- L 240 mm incl. thread, 4 x 140 mm plus welded, compressed nozzle, 1.5 x 100 mm

Inserts for test tubes, funnels
Beakers

E 103/1 insert 1/4
For use in G 7883, G 7893, G 7883 CD, PG 8535 and PG 8536, upper or lower baskets
- For approx. 200 test tubes, max. 12 x 75 mm
- Subdivided into 6 compartments
- Incl. A 13 cover
- Mesh width 8 x 8 mm
- H 102 (122), W 200, D 320 mm

E 104/1 insert 1/4
For use in G 7883, G 7893, G 7883 CD, PG 8535 and PG 8536, upper or lower baskets
- As E 103, but for test tubes up to 12 x 105 mm
- H 132 (152), W 200, D 320 mm

E 105/1 insert 1/4
For use in G 7883, G 7893, G 7883 CD, PG 8535 and PG 8536, lower basket
- As E 103, but for test tubes up to 12 x 165 mm
- Mesh width 9 x 9 mm
- H 192 (212), W 200, D 320 mm

E 139/1 insert 1/4
For use in G 7883, G 7893, G 7883 CD, PG 8535 and PG 8536, lower basket
- As E 103, but for test tubes up to 12 x 200 mm
- Mesh width 9 x 9 mm
- H 223 (243), W 200, D 320 mm

A 13 lid
- Replacement for E 103/1, E 104/1, E 105/1 and E 139/1 inserts
- Stainless steel
- 1 mm wire mesh
  8 mm mesh gauge
  4 mm all-round frame

E 149 insert 1/4
For use in G 7883, G 7893, G 7883 CD, PG 8535 and PG 8536, upper or lower baskets
- For 80 test tubes, max. 16 x 105 mm
- Incl. A 13 cover
- 80 compartments, 18 x 18 mm
- Base mesh size 8 x 8 mm

AK 12 insert 1/2
For use in G 7883, G 7893, G 7883 CD, PG 8535 and PG 8536, upper or lower baskets
- For funnels, beakers, wide-necked glassware, etc.
- H 67/127, W 225, D 442 mm

A 14 1/4 lid
- For AK 12 insert
- Cover to secure small beakers and sundry small parts such as stoppers, etc. in AK 12 insert
- Stainless steel
- 7 x 7 mm perforations, 3 mm ridge
- H 20, W 210, D 210 mm

Inserts for wide-necked glassware

E 106 insert 1/2
For use in G 7883, G 7893, G 7883 CD, PG 8535 and PG 8536, lower basket
- For wide-necked glassware, measuring beakers, etc.
- 10 spring hooks, H 175 mm
- 16 spring hooks, H 105 mm,

  Spacing approx. 60 mm
- H 186, W 195, D 430 mm

E 106/1 insert 1/2
For use in G 7883, G 7893, G 7883 CD, PG 8535 and PG 8536, upper or lower baskets
- 26 small spring hooks, H 105 mm, spacing approx. 60 mm
- H 116, W 195, D 410 mm

E 106/2 insert 1/2
For use in G 7883, G 7893, G 7883 CD, PG 8535 and PG 8536, lower basket
- 13 large spring hooks, H 175 mm, spacing approx. 85 mm
- H 186, W 180, D 420 mm

E 109 insert 1/2 (Fig.)
For use in G 7883, G 7893, G 7883 CD, PG 8535 and PG 8536, lower basket
- For 21 beakers up to 250 ml
- 21 x 3 supports
- H 155, W 230, D 460 mm

E 110 insert 1/2
For use in G 7883, G 7893, G 7883 CD, PG 8535 and PG 8536, lower basket
- For 10 beakers, 250 to 600 ml
- 10 x 3 supports
- H 175, W 230, D 460 mm

E 111 insert 1/2
For use in G 7883, G 7893, G 7883 CD, PG 8535 and PG 8536, lower basket
- For 8 beakers, 600 to 1000 ml
- 8 x 3 supports
- H 205, W 230, D 460 mm

E 144 insert 1/2
For use in G 7883, G 7893, G 7883 CD, PG 8535 and PG 8536, upper or lower baskets
- For 18 beakers up to 250 ml
- 18 x 3 supports
- H 131, W 200, D 445 mm

Insert for Petri dishes, watch glasses, object plates

E 118 insert 1/1
For use in G 7883, G 7893, G 7883 CD, PG 8535 and PG 8536, upper or lower baskets
- For 38 Petri dishes with diameter of 100 mm
- 38 holders, Height 70 mm
- Spacing approx. 26 mm
- H 120, W 460, D 445 mm

E 136 insert 1/1
For use in G 7883, G 7893, G 7883 CD, PG 8535 and PG 8536, lower basket
- For 56 Petri dishes with diameter of 100 mm
- 56 holders, Height 70 mm
- Spacing approx. 26 mm
- H 145, W 485, D 445 mm

E 137 onsert 1/1 for E 136
- For 56 Petri dishes with diameter of 100 mm
- 56 holders, Height 70 mm
- Spacing approx. 26 mm
- H 95, W 485, D 445 mm

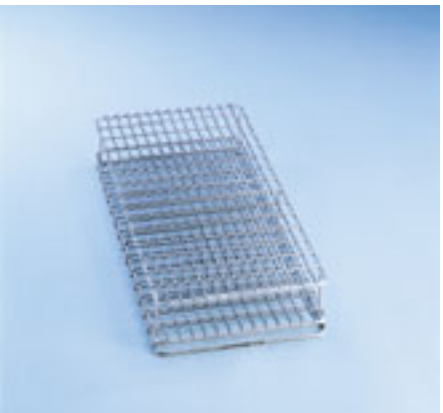

E 134 insert 1/2
For use in G 7883, G 7893, G 7883 CD, PG 8535 and PG 8536, upper or lower baskets
- For 210 slides
- 210 compartments 26 x 11 mm Wire gauge 3 mm
- H 73, W 200, D 445 mm

E 402 insert 1/2
For use in G 7883, G 7893, G 7883 CD, PG 8535 and PG 8536, upper or lower baskets
- For 44 Petri dishes 80-125 mm
- 23 supports, distance between supports 15 mm
- H 53, W 200, D 445 mm

E 403 insert 1/2
For use in G 7883, G 7893, G 7883 CD, PG 8535 and PG 8536, upper or lower baskets
- For 105 Petri dishes 50-60 mm
- 36 supports, distance between supports 9 mm
- H 35, W 200, D 445 mm

Accessories

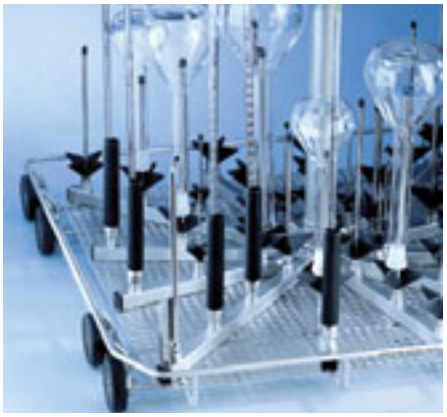

E 336 irrigation sleeve
- For pipettes (max. length 445 mm) in injector mobile units
- Plastic, with screw thread
- Ø 11 mm
- Length: 121 mm

Exclusive to MIELE

- Height-adjustable to suit individual applications

E 352 injector nozzle ①
- For injector mobile unit
- For combination with E 354
- 6 x 220 mm, screw thread

E 351 injector nozzle ②
- For injector mobile unit
- For combination with E 353
- 4 x 160 mm, screw thread

E 354 clip for nozzle ③
- For E 352 injector nozzle
- Height-adjustable
- 6 x 220 mm

E 353 clip for nozzle ④
- For E 351 injector nozzle
- Height-adjustable
- 4 x 160 mm

E 470 injector nozzle with clip ⑤
- For injector mobile unit
- 2.5 x 90 mm, screw thread

Injector nozzles with spring supports are particularly suitable for bottles, Erlenmeyer flasks and round flasks

Injector nozzle with plastic support
Front row, from left
ID 160 4 x 160 mm
ID 140 4 x 140 mm
ID 110 2.5 x 110 mm
ID 90 2.5 x 90 mm
Rear row, from left
ID 240 6 x 240 mm
ID 220 6 x 220 mm
ID 200 6 x 200 mm
ID 180 4 x 180 mm

Injector nozzles with spring supports are particularly suitable for bottles, Erlenmeyer flasks and round flasks

E 362 blanking screw
M 8 x 1 thread, as blind stoppers to close connectors on mobile units

Retrofittable magnetic spray arm
- For spray arm sensing function with retrofittable magnetic spray arms on PG 8535, PG 8536 on baskets/inserts without magnetic spray arms.

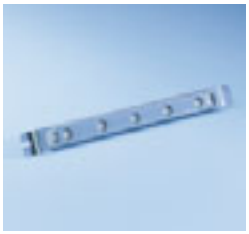

ML/2 Magnetic strip
- Magnetic strip for automatic mobile unit recognition/spray arm sensing
- Magnetic strip is precondition for spray arm sensing on PG 8535 and PG 8536
- 5 magnets, configurable
- 15 possible combinations

Accessories

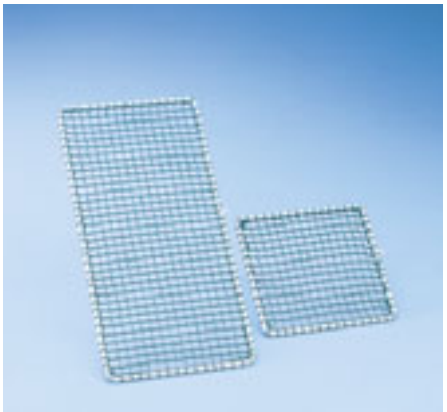

A2 Cover net 1/2
- Plastic-coated metal frame with plastic netting
- For 1/2 inserts
- 216 x 456 mm

A3 Cover net 1/4
- Plastic-coated metal frame with plastic netting
- For 1/4 inserts
- 206 x 206 mm

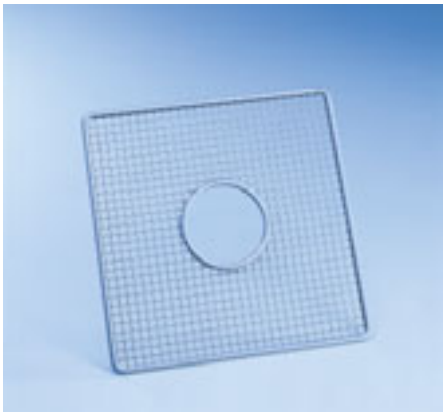

A5 Cover
- For O and U 184
- H 8, W 280, D 280 mm

A6 Cover net 1/2
- Stainless-steel with polypropylene mesh
- Particularly resilient and durable
- e.g. for E 142 mesh tray
- 215 x 460 mm

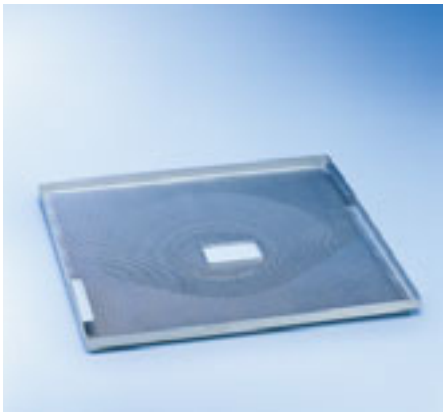

E 319/3 insert 1/1
- Surface filter for coarse soiling
- Contains soiling e.g. labels from laboratory glassware, glass splinters etc.
- W 500, D 488 mm

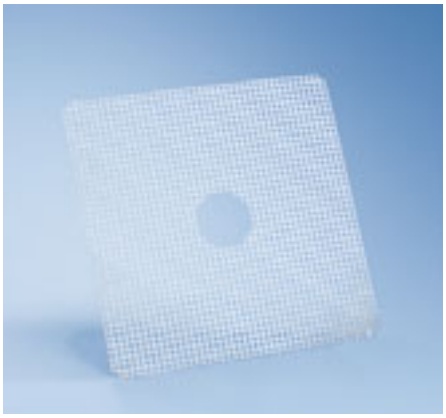

A11/1 insert 1/1 sub-frame
- With perforations 7 x 7 mm
- For upper or lower basket
- Stainless steel.
- W 429, D 429 mm

A12/1 insert 1/2 sub-frame
- With perforations 7 x 7 mm
- For upper or lower basket
- Stainless steel.
- W 429, D 224 mm

Accessories
Transport trolleys, plinths

MT Mieltrans trolley
- Trolley for storing and transporting baskets and inserts
- 4 height-adjustable levels
- Loading dimensions W 549 x D 599 mm
- Height-adjustment increments 102.5 mm
- 4 lockable wheels
- H 1985, W 616, D 662 mm

MC/1 Mielcar trolley
- For loading washer-disinfectors and handling baskets and inserts
- 2 levels (sloping towards centre)
- Rail handle and docking plate
- Docking height H 640–885 mm, infinitely adjustable
- 4 wheels, of which 2 are lockable
- H 1000, W 630, D 814 mm (with docking plate raised D 960 mm)

For use on PG 8536 and washer-disinfectors installed on 30 cm plinth

UE 30-60/60-78 plinth (illustrated)
- For use on G 7883 and G 7893
- Stainless-steel plinth, bolted to machine
- H 300, W 600, D 600 mm

UE 30-30/60-78 plinth (not illustrated)
- For use with G 7895/1 and G 7896
- Stainless-steel plinth, bolted to machine
- H 300, W 300, D 600 mm

UC 30-90/70-78 plinth (Illustrated)
- For use on G 7883 CD and PG 8535
- Stainless-steel plinth, bolted to machine
- H 300, W 900, D 700 mm

UC 30-90/60-78 plinth
- For use with G 7883 and G 7893 in combination with G 7895/1 or G 7896
- Stainless-steel plinth, bolted to machine
- H 300, W 900, D 600 mm

Accessories for dispensing liquid products

G 7896 DOS chemical supply unit
- Housing unit for DOS modules and supply canisters
- H 850 (820), W 300, D 600 mm
- Compatible with G 7883/G 7893 and PG 8535
- Freestanding unit, can be built under
- Unit with removable outer door panelling available in stainless steel or white
- Interior dimensions: H 530, W 249, D 480 mm
- 3 levels
  Level 1: Pull-out drawer on telescopic runners for DOS modules.
  Levels 2 and 3: Pull-out drawer on telescopic runners with drip tray and retainer for storage of supply canisters.

Illustrated:
2 x 5 l canisters. Requires the replacement of the long siphon provided with the machine with a a short siphon.
Optionally possible with DOS G 60/1 or DOS K 60/1 (surcharge).

Note:
The use of liquid detergent is recommended in the DESIN Vario TD programme.

The following canister sizes can be used L x H x W:
4 x 5 l: 245 x 145 x 225 mm*
2 x 10 l: 140 x 193 x 307 mm
2 x 10 l: 223 x 203 x 321 mm
2 x 10 l: 229 x 193 x 323 mm
2 x 10 l: 194 x 204 x 353 mm
1 x 20 l: 289 x 233 x 396 mm
1 x 25 l: 288 x 234 x 456 mm

* Only possible with DOS G 60/1 or DOS K 60/1 dispenser with short siphon

DOS module G 60
- For use on G 7883, G 7893, PG 8535
- For all liquid alkaline detergents
- Peristaltic pump, adjustable via machine controls
- Siphon (333 mm) with magnetic float switch for level-fill indicator for 5 and 10 l canisters
- Conversion kit (No. 5458030) with long siphon (10-30 l canisters) available from Spares

DOS G 60/1 dispenser module
- For use on G 7883, G 7893, PG 8535
- Features as per DOS G 60, but with short siphon tube (200 mm) for 5 l canister

DOS K 60 module
- For use on G 7883 and G 7893
- For all liquid alkaline detergents
- Peristaltic pump, adjustable via machine controls
- Integrated dispenser monitoring function ensuring high level of process security in compliance with EN ISO 15883
- Siphon (333 mm) with magnetic float switch for level-fill indicator for 5 and 10 l canisters
- Conversion kit (No. 5458030) with long siphon (10-30 l canisters) available from Spares

DOS K 60/1 dispenser module
- For use on G 7883 and G 7893
- Features as per DOS K 60, but with short siphon tube (200 mm) for 5 l canisters

DOS module G 10
- For use on PG 8535
- For liquid acidic products (neutralising agents/surfactant)
- Features as per DOS G 60

DOS S 20
- Bellows-type dispenser pump, retrofittable by Service
- For liquid acidic agents (surfactant, neutralising agent)

DOS NA 120
- Bellows-type dispenser pump incl. ultrasound volumetric control, retrofittable by Service
- For chemical disinfectant/liquid detergent (chemical disinfectant, liquid detergent, emulsifier)

Accessories for demineralised water

Illustration: Washer-disinfector
with RO-190 M2 reverse osmosis unit

Entire systems from a single supplier
Glassware, in particular, places great demands on the purity of water. Raw water contains salts and minerals which can result in deposits on the load and on machine surfaces. Fully demineralised water is instrumental in preventing corrosion.
In installations requiring large volumes of water, reverse osmosis installations offer an economical alternative to demineralisation cartridges (cf. Chart on Page 42). Pre-treatment of water increases the performance of a lab washer. Filtration protects against deposits, prevents machine downtimes and reduces the outlay for detergents.

The Miele range now includes the RO-190 M1 and RO-190 M2 reverse osmosis systems from VEOLIA.

VEOLIA WATER
Solutions & Technologies

RO-190 M2 reverse osmosis unit

- For continuous delivery of fully demineralised water
- Performance: max. permeate capacity 190 l/h
- **Reverse osmosis system in stainless-steel plinth with door and floor tray**
  Installation of 2 x 5 l canisters in plinth
- 2 status LEDs (conductivity/delivery)
- Max. yield approx. 50%
  Salt retention rate 96–98%
  Water quality approx. 5–100 µS/cm (depending on raw water, typically 5–20 µS/cm)
  Water connection to RO 3⁄4"
  Demineralised water outlet 3⁄4"
  Concentrate drainage hose (8 mm)
  Water pressure on intake side 2–6 bar
  Electrical connection 230 V/50 Hz
  Rated load 1 kW, Fuse rating 10 A
  Indicator lamps
  Current consumption: 0.6 kW/h
- Cold water max. 28°
  Max. raw water hardness 30°dH (total hardness), 15°dH (carbonate hardness)
- Rehingeable door
- External dimensions:
  H 520, W 600, D 560 mm

RO-190 M1 reverse osmosis system

- For continuous delivery of fully demineralised water
- Performance: max. permeate capacity 190 l/h
- **Stand-alone solution for installation in neighbouring unit**
- Stainless-steel panelling
- External dimensions:
  H 380, W 543, D 302 mm
- Further features and technical data as per RO-160 M2

Optional for RO-190 M2 and RO-190 M1 (VEOLIA accessory list)
- Installation of a pre-filter
- Additional connection, e.g. for connection of steriliser or water dispenser tap
- Pressure tank to store demineralised water
- Connection to water softener

Indicator lights

● ✓	**Status:** Ready or Stand by
● ⚠	**Conductivity and throughflow indicators:** Fault

Accessories for demineralised water

G 7895/1 Aqua Purificator
- For use on G 7883 and G 7893
- Housing unit for two E 310 or E 318 demineralisation cartridges
- Integrated conductivity meter
- Generally recommended quality for final rinse < 15 µS/cm
- H 850 (820), W 300, D 600 mm
- Freestanding unit, can be built under
- Outer panelling in stainless steel or white
- Electrical connection AC 230 V 50 Hz
- Water connection:
  1 x Cold water 3⁄4" threaded union for connection of cartridge (hose approx. 1.2 m long)
  1 x connection of cartridge to machine with 3⁄4" threaded union (approx. 1.2 m long)
  2.5–10 bar flow pressure to cartridge (pressure loss approx. 1 bar per cartridge)

E 310 Water demineralisation cartridge, pre-charged
- Pressure-proof stainless-steel cartridge
- H 570, Ø 240 mm
- Complete with vent and pressure relief valve
- Contains 20 l of reusable mixed resin

Delivery capacity in litres depends on the salt content of the raw water and the max. acceptable conductivity.

Conductivity table

	5 µS/cm	10 µS/cm
5°dH	4250	4500
10°dH	2125	2250
15°dH	1420	1500
20°dH	1070	1125
25°dH	850	950
30°dH	710	750

The information given in this chart is intended only as a guide.

E 318 Water demineralisation cartridge, empty
- Charged with 20 l of single-use resin

E 315 single-use resin
- 20 l homogenous, mixed-bed resins for E 318
- Box with two 10 l bags, vacuum-packed in plastic sacks
- Replacement filter bag

E 316 Refill set
- Plastic barrel with lid and funnel
- For 30 l disposable resin

LWM Module C conductivity meter
- For E 310/E 318 water demineralisation cartridges
- H 118, W 235, D 110 mm
- Electrical connection AC 230 V 50 Hz
- 2 hoses, approx. 1.9 m, 3⁄4" threaded union
- Integrated conductivity meter, 0–20 µS/cm
  1.5 µS/cm = tri-distilled
  2.5 µS/cm = bi-distilled
  20.0 µS/cm = mono-distilled

Water demineralisation cartridge v. Reverse osmosis system

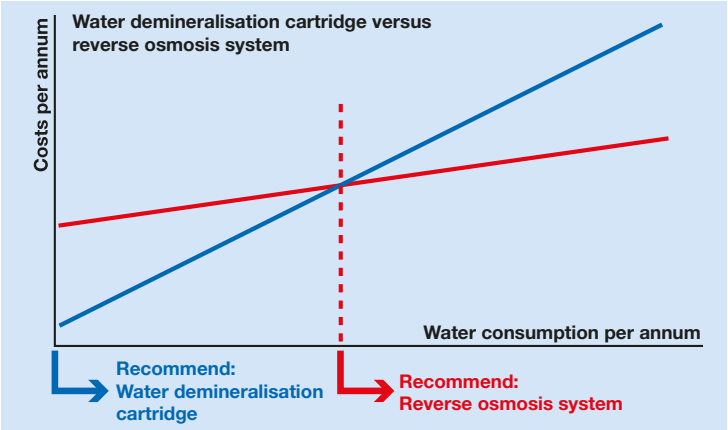

E 313 wall valve (top)
- For manual delivery of demineralised water
- Pressure hose approx. 1.5 m, pressure-proof to 10 bar

E 314 cabinet mounted valve (bottom)
- For manual delivery of demineralised water
- Pressure hose approx. 1.5 m, pressure-proof to 10 bar

Demineralised water cartridge v. reverse osmosis
To protect instruments, Miele recommends the use of fully demineralised water in the final rinse cycle. Miele offers both water demineralisation cartridges and reverse osmosis systems. The relative benefits of the two systems depend largely on the number of washing and disinfecting programmes run per day. In general, the higher the requirements, the greater the likelihood of a reverse osmosis system being more economical than demineralised water cartridges.

Accessories - Demineralised water

PG 8597 Aqua Soft system, twin-tank water softener

- For continuous supply of softened water for max. supply hardness of approx. 40°d (7.2 mmol/l)
- H 570, W 360, D 360 mm
- Weight (excl. salt) approx. 30 kg
- Freestanding unit on castors. Filled from top.
- Plastic casing
- Performance: Constant supply 19 l/min, max. delivery 30 l/min
- Demand-controlled twin-tank system
- Does not require power supply
- Equipped with 2 x 4.5 l resin-filled canisters and 1 container for 20 kg of salt
- Water connection:
  2 pressure hoses, approx. 1.5 m, ¾" threaded union
  1 x cold or hot water connection, max. 70 °C min. 1 bar intake flow pressure, max. static pressure 8 bar
  2.5 bar minimum flow pressure on machines without water softener
  3.5 bar min. flow pressure on machines with softener
  1 x connection from system to machine
  2 drainage hoses, approx. 1.5 m
  (DN 8 for reactivation water and overflow, odour trap and non-return valve to be provided on site
- Water consumption 19 l/reactivation cycle

Technical data
G 7883, G 7893, G 7883 CD

Washer-disinfectors	**G 7883**	**G 7893**	**G 7883 CD**
Frontloading unit with bottom-hinged door, excl. baskets	•	•	•
Freestanding unit with lid, can be built under	•	•	–
Built-under/freestanding unit without lid	–	–	•
Freshwater system, max. temperature 93°	•	•	•
Circulation pump [Qmax l/min]	400	400	400
Controls/programmes			
MULTITRONIC Novo Plus/10 programmes	•	•	•
Electric door lock	•	•	•
Buzzer, acoustic signal at end of programme	•	•	•
Programme recontinuation in event of power outage	•	•	•
Serial interface for process documentation,			
extendible to USB with PC connection	• (depending on model)	•	•
Water connections			
1 x cold water, 0.5–10 bar flow pressure (50–1000 kPa)	•	•	•
1 x cold water for steam condenser, 0.5–10 bar flow pressure (50–1000 kPa)	–	•	•
1 x demineralised water, 0.5–10 bar flow pressure (50–1000 kPa)	• (only units without ADP)	•	• (only units without ADP)
1 x cold water, 0.5–10 bar flow pressure (50–1000 kPa)	•	•	•
No. of inlet hoses 1/2" with 3/4" threaded union, length approx. 1.7 m	3	4	4
Drain pump DN 22, head height 100 cm	•	•	•
Steam condenser water drain (DN 22)	–	•	•
WaterProof System (WPS)	•	•	•
Electrical connection, supply lead approx. 1.7 m, 5 x 2.5 mm^2			
3 N AC 400 V 50 Hz/convertible to 2 N AC 400 V 50 Hz	•/•	•/–	•/–
Heating [kW] (3 N/2 N)	9.0/6.0	9.0/–	9.0/–
Circulation pump [kW] (3 N/2 N)	0.7/0.7	0.7/–	0.7/–
Total rated load [kW] (3 N/2 N)	9.7/6.7	9.7/–	9.7/–
Fuse rating [A] (3 N/2 N)	3 x 16/2 x 16	3 x 16/–	3 x 16/–
Dispenser systems			
1 Door dispenser for powder detergent	•	•	•
1 Door dispenser for liquid surfactant	•	•	•
1 DOS 10/30 dispenser pump for liquid acidic agents	•	•	•
1 DOS 60/30 dispenser pump for liquid detergent	–	–	•
Drawer with 2 supply canisters, 5 l each	–	–	•
Connection options			
DOS G60, DOS G60/1 or DOS K60, DOS K60/1 for liquid detergent/chemicals	1	1	–
Applications involving oils and greases:			
Oil- and grease-resistant gasket	Optional	Optional	Optional

• = Standard, – = Not available

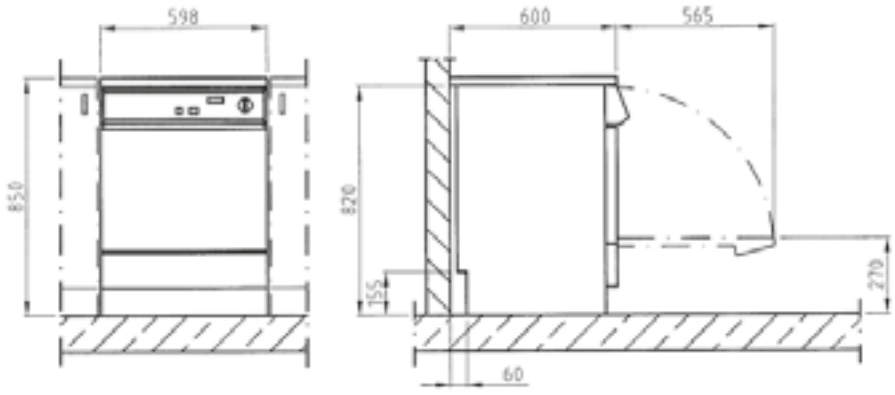

G 7883/G 7893

Washer-disinfectors	G 7883	G 7893	G 7883 CD
Water softener			
for cold and hot water to max 70°, Monobloc	•	•	•
Steam condenser			
Heat exchanger	•	–	–
Aerosol	–	•	•
Drying unit/Radial fan			
Fan motor [kW]	–	0.3	0.3
Heater bank [kW]:	–	1.8	1.8
Total rated load [kW]	–	2.1	2.1
Air throughput [m^3/h]	–	50	60
Temperature selection in 1 ° increments [°C]	–	50–99	50–99
Time selection in 1-minute increments [min]	–	1–99	1–99
Pre-filter EU 4, filter rating > 95%, filter life 100 h	–	–	•
Particulate filter/HEPA filter H 12	–	•	–
Filtration rate >99.5% (DIN EN 1822)/life cycle 100 h			
Particulate filter/HEPA filter H 13	–	–	•
Filtration rate >99.992% (DIN EN 1822)/life cycle 500 h			
Dimensions, weight			
External dimensions H / W / D (excl. lid H 820 mm) [mm]	850/600/600	850/600/600	820/900/700
Cabinet dimensions H / W / D [mm]:	500/535/O=473 U=516*	500/535/O=473 U=516*	500/535/O=473 U=516*
Weight [kg]	74	78	101
Casing options			
White casing, front with decor frame for decor panel (DER)	•	–	–
Door: H 441-442/W 585-586/Thickness 1 mm			
Service panel: H 116.5-117.5/W 585-586/Thickness 1 mm			
white casing, laminate lid (AW)	•	–	–
Stainless steel (AE)	•	•	•
Test certificates			
VDE, VDE-EMC, IP20	•	•	•
MDD CE 0366	–	–	–

*O = Upper basket, U = Lower basket
• = Standard, – = Not available

The technical data contained in this brochure applies mainly to continental Europe.
www.miele-professional.com provides detailed information on national versions and non-standard voltages.

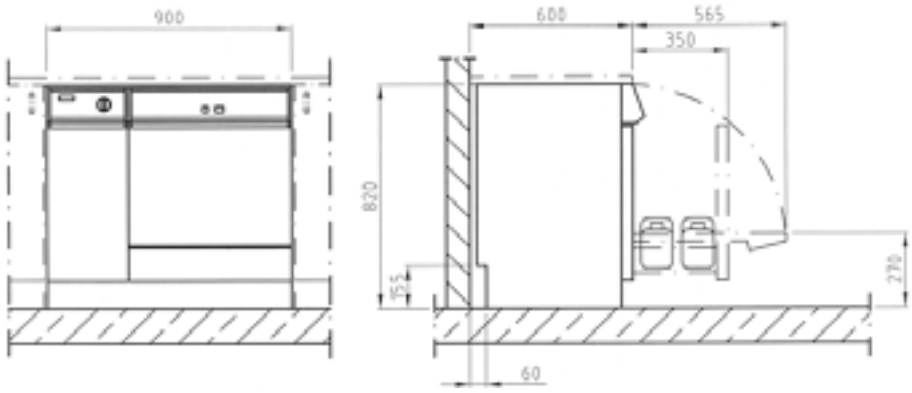

G 7883 CD

Technical data
PG 8535 and PG 8536

Washer-disinfectors	**PG 8535**	**PG 8536**
Frontloading unit with bottom-hinged door, excl. baskets	•	•
Built-under/freestanding unit without lid	•	–
Freestanding unit with lid	–	•
Freshwater system, max. temperature 93°	•	•
Circulation pump [Qmax l/min]	400	600
Controls/programmes		
PROFITRONIC+, freely programmable	•	•
64 programme slots	•	•
Spray arm sensing	•	•
Magnetic strip for automatic mobile unit recognition	•	•
Conductivity metering	–	Optional
Network interface for process documentation	•	•
Serial printer interface for process documentation	•	•
Remote service enabled	•	•
Electric door lock	•	•
Peak-load negotiation	•	•
Water connections		
1 x cold water, flow pressure	50 - 1000 kPa	200 - 1000 kPa
1 x cold water for steam condenser, flow pressure	50 - 1000 kPa	200 - 1000 kPa
1 x hot water, flow pressure	50 - 1000 kPa	200 - 1000 kPa
1 x demineralised water, flow pressure	50 - 1000 kPa	50 - 1000 kPa
Feed pump for unpressurised demineralised water	Optional	Optional
4 inlet hoses ½" with ¾" threaded union, (l = approx. 1.7 m)	•	•
Drain pump DN 22, head height 100 cm	•	•
Steam condenser water drain (DN 22)	•	•
WaterProof System (WPS)	•	•
Electrical connection		
3 N AC 400 V 50 Hz, supply lead approx. 1.7 m, 5 x 2.5 mm^2	•	•
Heating [kW]	9.0	9.0
Circulation pump [kW]	0.7	1.2
Total rated load [kW]	9.7	10.2
Fuse rating [A]	3 x 16	3 x 16

• = Standard, – = Not available

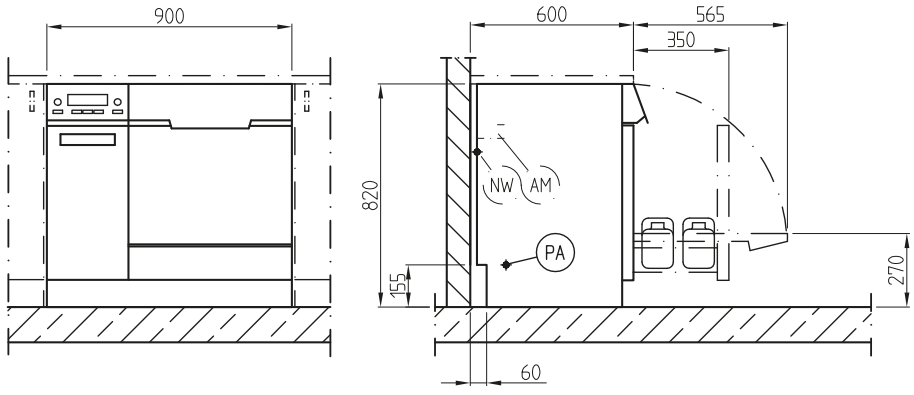

PG 8535

Washer-disinfectors	PG 8535	PG 8536
Dispenser systems		
1 dispenser pump for liquid acidic agents	• (peristaltic pump)	• (bellows-type pump)
1 dispenser pump for liquid detergent	• (peristaltic pump)	• (bellows-type pump)
1 connection for external DOS G10 or DOS G60 dispenser module	•	–
DOS S20 dispenser pump for neutralising agent and surfactant	–	Optional
DOS NA120 dispenser pump for disinfectant or liquid detergent	–	Optional
PerfectFlow ultrasound volumetric dispenser control	–	•
Drawer for 2 x 5 l supply canisters	•	–
Drawer for 4 x 5 l supply canisters	–	•
Applications involving oils and greases:		
Oil- and grease-resistant gasket	Optional	Optional
Water softener		
for cold and hot water to max 70°, Monobloc softener	•	–
for cold and hot water, max 70°, large-capacity water softener	–	•
Steam condenser		
Aerosol	•	•
Drying unit		
Fan motor [kW]	0.3	0.3
Heater bank [kW]:	2.3	2.3
Total rated load [kW]	2.6	2.6
Air throughput [m^3/h]	60	60
Temperature selection in 1 ° increments [°C]	60-115	60-115
Time selection in 1-minute increments [min]	1-240 min	1-240 min
Pre-filter EU 4, filter rating > 95%, filter life 100 h	•	•
Particulate filter/HEPA filter H 13,		
Filtration rate >99.992% (DIN EN 1822), life cycle 500 h	•	•
Dimensions, weight		
External dimensions H / W / D [mm]	820/900/700	1175/900/700
Cabinet dimensions H / W / D [mm]:	500/535 O*=473, U*=516	500/535 O*=473, U*=516
Weight [kg]	114	177
Outer casing		
Stainless steel (AE)	Stainless steel	Stainless steel
Compliance with standards		
DIN EN ISO 15883-1/2, EN 61010-2-40, EN 61326	•	•
Test certificates		
VDE, VDE-EMC, MPG CE0366, IP20	•	•

*O=Upper basket, U = Lower basket,
• = Standard, – = Not available

The technical data contained in this brochure applies mainly to continental Europe.
www.miele-professional.com provides detailed information on national versions and non-standard voltages.

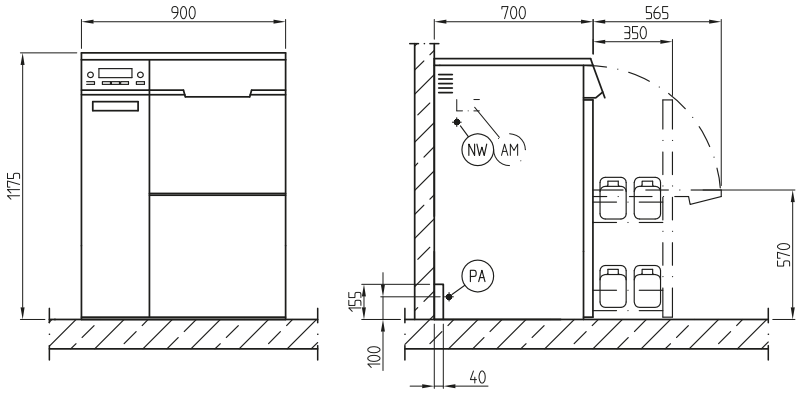

PG 8536

Miele PROFESSIONAL

Miele & Cie. KG
Carl-Miele-Str. 29, D-33332 Gütersloh
P.O. box, D-33325 Gütersloh

www.miele-professional.com
info@miele.de

Miele worldwide:

AUSTRALIA
Miele Australia Pty. Ltd.
1 Gilbert Park Drive
Knoxfield, VIC, 3180
Tel. +613 97647130
Telefax +613 97647149

AUSTRIA
Miele Gesellschaft mbH.
Mielestraße 1
5071 Wals/Salzburg
Tel. +43 50 800-81 481
Telefax +43 50 800-81 429

BELGIUM
N.V. Miele S.A.
z.5 Mollem 480
Hof te Bollebeeklaan 9
1730 Mollem
Tel. +32 2451 14 11
Telefax +32 2451 14 14

CANADA
Miele Limited
161 Four Valley Drive
Vaughan, ON L4K 4V8
Tel. +1 905 660-9936
Telefax +1 904 532-2290

CHILE
Miele Ltda.
Nueva Costanera 4055
Vitacura
Santiago de Chile
Tel. +56 2 95700-00
Telefax +56 2 95700-79

CHINA
Miele Beijing Rep. Office
3W Suite 512, Oriental Plaza,
1 East Chang An Avenue
Dong Cheng District
Beijing 100738, P.R. China
Tel. +86 10 85151919
Telefax +86 10 85181797

Miele (Shanghai) Trading Ltd.
1-3 Floor, No. 82 Shi Men Yi Road,
Jing'An District
200040 Shanghai, China
Tel. +86 21 61573500
Telefax +86 21 61573511

CROATIA
Miele trgovina i servis d.o.o.
Buzinski prilaz 32
10000 Zagreb
Tel. +385/1/66 89 000
Telefax +385/1/66 89 090

CZECH REPUBLIC
Miele spol. s.r.o.
Holandská 4
63900 Brno
Tel. +420 5 4 35 53-1 11
Telefax +420 5 4 35 53-1 19

DENMARK
Miele A/S
2600 Glostrup, Erhvervsvej 2
Tel. +4543271100
Tel. Salg/Professional
+4543271500
Tel. Jylland +4597127066
Telefax hovednr. +4543271109
Telefax Salg/Professional
+4543271509

ESTONIA
Miele OÜ
Tornimäe 5
10145 Tallinn
Tel. +372 6 55 68 11

FINLAND
Miele Oy
Porttikaari 6
01200 Vantaa
Tel. +3589 87 59 70
Telefax +3589 87 59 72 99

FRANCE
Miele S.A.S.
9 avenue Albert Einstein
93151-Le Blanc-Mesnil (Paris)
Tel. +33(0)1/49 39 34 44
Telefax +33(0)1/49 39 44 38

GERMANY
Miele & Cie. KG
Carl-Miele-Straße 29
33332 Gütersloh
Tel. 0 180 230 31 31 (6 ct)*
Telefax 0 800 335 55 33
*Only in Germany

GREAT BRITAIN
Miele Co. Ltd.
Fairacres
Marcham Road, Abingdon
Oxon OX14 1TW
Tel. 0845 330 3618
Telefax 01235 405636

GREECE
Miele Hellas E.P.E.
Mesogion 257
154 51 N. Psychiko-Athen
Tel. national 01/10 6 79 44 44
international 00 30/2/10 6 79 44 44
Telefax 01/10 6 79 42 09
international 00 30/2/10 6 79 42 09

HUNGARY
Miele Kft.
Alsó Törökvész út 2.
1022 Budapest
Tel. +36 1 8806-400
Telefax +36 1 8006-402

HONG KONG
Miele (Hong Kong) Ltd.
41/F - 4101, Manhattan Place
23 Wang Tai Road,
Kowloon Bay
Tel. +852/2610 1331
Telefax +852/2610 1013

INDIA
Miele India Pvt. Ltd.
Ground Floor,
Copia Corporate Suites,
Plot No. 9, Jasola,
New Delhi – 110025
Tel. +91 (0)11 469000-00
Telefax +91 (0)11 469000-01

IRELAND
Miele Ireland Ltd.
2024 Bianconi Avenue
Citywest Business Campus
Dublin 24
Tel. +3531 461 07 10
Telefax +3531 461 07-97

ITALY
Miele Italia S.r.l.
Strada di Circonvallazione, 27
39057 S. Michele-Appiano (BZ)
Tel. +39 04 71/66 61 11
Telefax +39 04 71/66 63 50

JAPAN
Miele Japan Corp.
E Space Tower 11F
3-6 Maruyamacho
Shibuya-ku Tokyo
150-0044 Japan
Tel. +81(3)5784-0030
Telefax +81(3)5784-0035

KAZAKHSTAN
Miele LLP
Building 1B (office 602)
Al-Farabi Pr. 13
050059 Almaty
Tel. +7 727 3111141
Telefax +7 727 3111042

KOREA
Miele Korea Limited
Miele Haus 8 fl.,
607-10 Yeoksam-dong
Gangnam-gu
Seoul 135-080
Tel. +82 2 3451 9353
Telefax +82 2 3451 9399

LATVIA
Miele SIA
Zaubes Str. 9A-38
1013 Riga
Tel. +371 67889877
Telefax +371 67889879

LITHUANIA
Miele Appliances UAB
S. Zukausko g. 2/3-116
08240 Vilnius
Tel. +370 52487529
Telefax +370 52487529

LUXEMBOURG
Miele s.à r.l.
20, Rue Christophe Plantin
2339 Luxembourg
Tel. +352/4 97 11-25
Telefax +352/4 97 11-39

MALAYSIA
Miele Sdn Bhd
Suite 12-2, Level 12
Menara Kencana Petroleum
Solaris Dutamas
No. 1, Jalan Dutamas 1
Kuala Lumpur 50480
Tel. +603 6205 3899
Telefax +603 6205 3998

MEXICO
Miele S.A. de C.V.
Av. Santa Fé 170
German Centre 0-4-2
Col. Lomas de Santa Fé
C.P. 01210 México, D.F.
Tel. +52/55 85 03 98 70
Telefax +52/55 85 03 98 74

NETHERLANDS
Miele Nederland B.V.
De Limiet 2
4131 NR Vianen
Tel. +31 3 47/37 88 83
Telefax +31 3 47/37 84 29

NEW ZEALAND
Miele New Zealand Ltd.
Unit L, 10–20 Sylvia Park Road
Mt. Wellington, 1060 Auckland
Tel. +64 9573 1269
Telefax +64 9573 1268

NORWAY
Miele AS
Løxaveien 13
1351 Rud
Tel. +47/67 17 31 00
Telefax +47/67 17 31 10

POLAND
Miele Sp. z. o. o.
ul. Gotarda 9
02-683 Warszawa
Tel. +48 22/5 48 40 00
Telefax +48 22/5 48 40 10

PORTUGAL
Miele Portuguesa, Lda.
Av. do Forte, 5
2790-073 Carnaxide
Tel. +351/21/42 48-100
Telefax +351/21/42 48-109

ROMANIA
Miele Appliances SRL
Intrarea Narciselor 8
Otopeni
Jud. Ilfov
Tel. +40 21 3520777
Telefax +40 21 3520776

RUSSIA
000 Miele CIS
Leningradsky Prospekt, 31A, bld. 1
125284 Moscow
Tel. +7 495 745-8992
Telefax +7 495 745-8680

SERBIA
Miele d.o.o. Beograd
Balkanska 2
Beograd – Stari Grad 11000
Tel. +381 11 2055060
Telefax +381 11 2055065

SINGAPORE
Miele Pte. Ltd.
163 Penang Road
#04-02/03 Winsland House II
Singapore 238463
Tel. +65/67 35 11 91
Telefax +65/67 35 11 61

SLOVAKIA
Miele s. r. o.
Plynárenská 1
82109 Bratislava
Tel. +421/2/58 10 31 11
Telefax +421/2/58 10 31 19

SLOVENIA
Miele d.o.o.
Brnčičeva ulica 41 g
1231 Ljubljana – Črnuče
Tel. +386 1563 44-80
Telefax +386 1563 44-90

SOUTH AFRICA
Miele (Pty) Ltd.
63 Peter Place
Bryanston 2194
Tel. +27(0)11/5 48-19 00
Telefax +27(0)11/5 48-19 35

SPAIN
Miele S.A.U.
Carretera de Fuencarral, 20
28108 Alcobendas (Madrid)
Tel. +34/91/6 23 20 00
Telefax +34/91/6 62 02 66

SWEDEN
Miele AB
Industrivägen 20
Box 1397
171 27 Solna
Tel. +46 85 62 29-000
Telefax +46 85 62 29-209

SWITZERLAND
Miele AG
Limmatstr. 4
8957 Spreitenbach
Tel. +4156 4 17 20 00
Telefax +4156 4 17-24 69

TURKEY
Miele Elektrikli Aletler
Dış. Tic. ve Paz. Ltd. Şti.
Güvercin Sokak No. 10
34330 Levent-Istanbul
Tel. +90/2 12/3 86-08 00
Telefax +90/2 12/3 25 84 49

UKRAINE
Miele LLC
Zhylyanskaya Str. 48, 50 A
01033 Kiev
Tel. +38 044 4960300
Telefax +38 044 4942285

UNITED ARAB EMIRATES
Miele Appliances Ltd.
Gold & Diamond Park
Sheikh Zayed Road
Building No. 6,
Offices No. 219
Dubai
Tel. +971 4 3418444
Telefax +971 4 3418852

USA
Miele, Inc.
9 Independence Way
Princeton, NJ 08540
Tel. 001-800/843 72 31
Telefax 001-609/419 42 41

OTHER COUNTRIES:
Sales International
Miele & Cie. KG
Carl-Miele-Straße 29
33332 Gütersloh
Tel. +49(0)52 41-89 15 07
Telefax +49(0)52 41-89 15 00

An active contribution towards protecting the environment:
This brochure is printed on paper bleached without the use of chlorine.

© Miele & Cie. KG, Gütersloh / Mat. no. 9 293 440 / FM 112109 / All rights reserved (44) - 11/11